11-v3n2-1984.pdf

HUMAN POWER

THE JOURNAL OF THE IHPVA ISSUE NO 11 Vol. 3, no.2 WINTER 1984

THE *FLYING FISH* HYDROFOIL

by Alec N. Brooks

The maximum-speed capabilities of human-powered water vehicles (HPWVs) have remained fairly constant over the last century. Other than the slender and delicate rowing shells, most varieties of human-powered water vehicles are designed for practicality and durability. High maximum speeds, while desirable, are not primary design considerations. Rowing shells are designed for high speeds, and represent the ultimate rowed displacement-type hulls. Until recently, they were also the fastest of all types of human-powered water vehicles.

The IHPVA has in recent years begun promoting the development of unlimited HPWVs. 'Unlimited' here means that any vehicle and propulsion concepts are allowed, as long as only human power is used. Spurred by the prospect of IHPVA-sanctioned competitions, several new and innovative designs have appeared recently. These include Jon Knapp's *Saber Proa*, the Watson/Hibbs *Trireme*, and the many catamaran boats by Shields Bishop. These vehicles were designed to vastly improve the speeds of practical HPWVs, and do so handily. But none of these vehicles can win against a rowed shell in smooth water.

About two years ago, Allan Abbott and I became intrigued by HPWV competition. We wanted to build the fastest possible single-rider water vehicle, with no concessions whatsoever to practicality. We thought about the problem endlessly, and came up with several seemingly good prospective configurations. However, after more careful analysis, a fatal flaw of each design was always uncovered. For example, we nearly started building a propeller-driven rowing shell, based on the higher propulsive efficiency attainable with a propeller. The problems with this configuration were that there was no effective way to balance the craft, and the added drag of the propeller strut and drive system underwater would largely negate the added efficiency of the propeller.

We had realized for some time that hydrofoils offered hopes of much higher speeds, but there was the sticky problem of initially getting the boat up to takeoff speed. Very large hydrofoil wings could be used to reduce the takeoff speed to 5 or 6 mph, but would have too much wetted area (drag) to go very fast. The fastest hydrofoils would have very small wings, but would have to take off at 10 mph or more. This presented an enormous roadblock - a very long and slender hull would be required in order to attain the necessary takeoff speed for small hydrofoils. The added weight of the big hull would significantly increase the power required when foil-borne. These problems were experienced by Jon Knapp several years earlier. He tried hydrofoils on an early version of the Saber Proa, and was never able to go fast enough

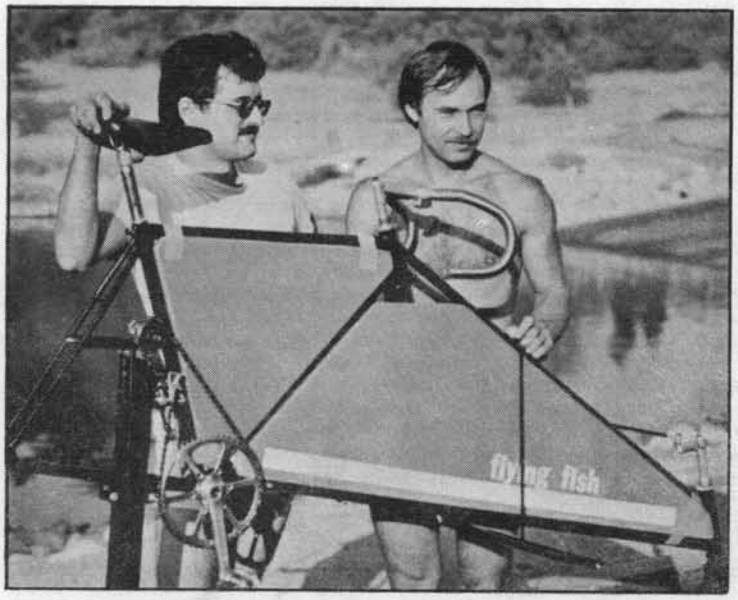
Alec Brooks (l) and Allen Abbott (r) with their creation.

Cont. on Page 7


↑ *Allan Abbott prepares for launching. Assisting are Colony Abbott and Alec Brooks. Top of speed-measuring manometer is visible.*

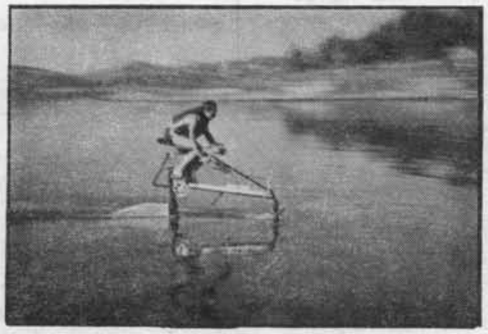
Allan Abbott flies by at about 12 mph.

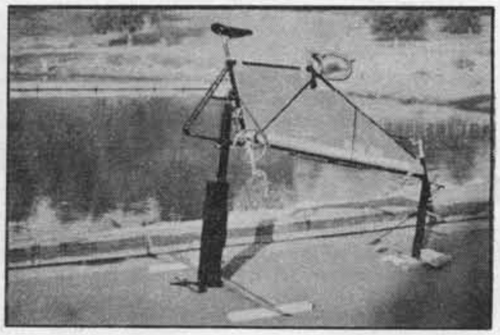
↑ *The Flying Fish, weight: 39 lb, max. speed: 14+ mph. Note surface follower on front strut.*

IHPVA *HUMAN POWER* Editor: David Gordon Wilson
Design/Layout Editor: Patricia Cummings

SIX METERS PER SECOND, 13.5 MPH, ON WATER!

This issue of *HUMAN POWER*, coming at the end of the first decade of the IHPVA, should start new enthusiasms in receptive minds and bodies. Just as the first speed trials and races with faired bicycles that Chet Kyle and Jack Lambie organized caught people's imagination, with invention and effort being soon joined to produce steadily increasing speeds in land vehicles; and just as Paul MacCready and his team amazed the world with their simple and daring approach to human-powered aircraft, and encouraged others to try to follow; so the achievements of the pioneers in human-powered watercraft, recorded in this journal, are likely to start some feverish and wholly delightful activity.

There are obvious parallels between human-powered land and water vehicles. Both types were crude and painful to use for all human experience until towards the middle of the last century. Human power was developed primarily through straining the arms and back against almost unyielding tasks. Then, quite rapidly and almost concurrently, the bicycle and the sliding-seat rowing shell were invented and developed to become extremely light and very efficient, with the power in both cases being produced principally by the muscles of the legs.

In both media, developments were discouraged by restrictive rules. Bicycles were fitted with fairings, and recumbents with small frontal area were made and raced, but were judged inadmissible for contests, especially if riders using them beat the champions who were riding standard machines. On the water some pedalled propeller-driven craft were made and raced at the end of the last century, and allegedly produced some remarkable performances, but again were disallowed for competition. The lightweight rowing shell and the racing bicycle ruled supreme because they were unchallenged. But who could deny that each was in its way surpassingly beautiful, produced lovingly by skilled hands?

The creation of the IHPVA ten years ago also created a multimedia arena where the restrictive rules didn't apply. The frequency with which records on land were broken and rebroken and the magnitude of the maximum speeds reached astonished even the enthusiasts. Although the Kremer rules for human-powered aircraft competition must be credited in part for the amazing performances of the Gossamer team, we basked in the reflected glory and in our connection with our past-president and present international president, Paul MacCready.

Only on the water was progress difficult to discern almost until this year. Suddenly all has changed. Jon Knapp has been delighting spectators with his challenges in his Saber Proa. And now Alec Brooks and Allan Abbott, holder of the paced speed record for bicycles, former speed-trials record holder, and former IHPVA president, have designed, developed and ridden a pedalled hydrofoil that appears to be substantially faster than the single-sculling record speed in its initial trials, and could be faster than a champion rowed eight. Their stories of their trials, tribulations, and triumphs are recorded here.

But lest we be condemned for being speed-crazy, read further! There are delightful articles by Phillip Thiel, on his Dorycycle "workboat"; by Phil Bolger, who shows his interest in boating for fun and relaxation quite strongly, on Madeline, a pedalled side-wheeler; by Dick Ott, who produces the Water-Strider screw-propelled pedalled catamarans and the components for sevral other HPBs, and who has been a pioneer in the application of human power to many other tasks; Hartley Rogers, Jr., giving a nice introduction and background to rowing; and Gene Larrabee, whose propeller-design method has brought a step increase in efficiency in human-powered aircraft and boats.

Read on and revel in the beginning of a new phase of human power.

Dave Wilson
(David Gordon Wilson, editor)

HISTORY OF ROWING

Organizing Committee for the Games of the XXI
Olympiad, Montreal 1976

Oars have been used to propel water craft since ancient times but competitive rowing is believed to have its origins in the races Thames River boatmen held among themselves four hundred years ago. However, it was not until 1829 that rowing was introduced to the world of sport when crews from Oxford and Cambridge Universities competed in a race on the Thames between Putney and Mortlake on a course measuring 6838 meters, the course that is still used by crews from the same universities in their annual classic. Great Britain hosted the first international rowing event, the Royal Henley Regatta, which has been attracting the best crews since 1839.

Boats have been evolving through the ages, and the craft used in the original competitions on the Thames were scarcely the trim craft we have today. One change came in 1843 with the introduction of outriggers, which enabled oarsmen to work their sweep oars in oarlocks extended from a narrow boat. That led to slim boats used in modern competitions.

Then in 1856 came racing boats without keels, flat swift craft that could be propelled at much faster speeds. About the same time, oarsmen and scullers discovered the advantages of using their legs and sliding forward and backward as they rowed. At first they greased the panel on which they were sitting and sat on sheepskin. Sliding seats were introduced in 1871.

Other developments over the years came in the type of boats and oars. Sculls are those shorter oars used by single rowers with one for each hand. Sweep oars are longer and are used with both hands, so the oarsmen alternate.

Britain continued as a world leader in the sport for nearly a century. Professional scullers from England and the British Empire taught all the leading countries of Europe how to scull and how to row in the years before the Second World War. It has been reported that there was no money available for their services in Britain so they went to the continent.

They were so successful in their teaching that the dominance in rowing and sculling shifted to the continent and in the 1936 Olympic Games in Berlin, Germans won five of the seven gold medals. Britain won only the double sculls.

In 1960 the German Ratzeburg eight, coached by Karl Adam, won the gold medal in the Rome Olympic Games and went on to dominate competition for years. The key was Adam's system of teaching rowing by placing emphasis on sculling training, small boat work, and extensive weight training.

CONTENTS

A THEORETICAL STUDY OF ROWING

by Hartley Rogers, Jr.

(Editorial note: Hartley Rogers is a professor of mathematics at MIT and a keen and accomplished oarsman. He is working on a model of rowing that gives insights into boat design and rowing and sculling technique. He gave me permission to publish the introduction to his draft paper, which I think gives a nice perspective on the sport of rowing. At one time I, too, sculled on the Charles, though inexpertly, and with two friends started the firm of Wilson Davis & Zimmerman, producing single rowing shells having aluminum tubular frames and foam-and-fiberglass hulls.)

Rowing at present serves a variety of practical, recreational, and competitive athletic purposes. The practical uses of rowing will continue, and the recreational and competitive aspects of rowing have the potential for major growth. Burgeoning interest in rowing is evident: (i) in the marked increase in rowing activity across the nation and in traditional centers like Boston and Philadelphia where the demand for participation and equipment far exceeds existing facilities; (ii) in the rapid yearly increase in the number and size of competitive regattas; (iii) in the recent sharp increase in competitive rowing for older age groups; (iv) in the increased number and size of college programs; (v) in the extraordinary enthusiam for rowing on the part of many women athletes; and (vi) in the recent increases in the manufacture and sale of rowing equipment (and in the number of manufacturers). Rowing is found by many to be a healthful and aesthetically pleasing form of exercise that is open to all age levels and that leaves the participant less vulnerable to joint and muscle injury than some other forms of comparably vigorous sport.

In the discussion that follows, we shall concentrate on competitive rowing. As with automobile and sailboat racing, improvements in technology and technique that occur in the competitive area can have major and direct influence on the broader recreational area as well. Rowing is America's oldest intercollegiate sport. (For a time, in the 19th century, it was America's most popular spectator sport.) Equipment and technique have evolved steadily over the past century and a half. By 1900, racing equipment had reached approximately its present general shape and form. The sliding seat, the external rigger, and the swiveled oarlock had been developed, and dimensions of boats and oars were not far from what they are today. Nevertheless, from 1900 to 1950 important changes occurred, including the introduction of longer slides and of altered styles to go with them and the development of lighter and stronger boats and oars through the increased use of plywood.

In the period from 1950 to 1980, change has occurred at a more rapid rate and has led to major increases in racing speed. Changes have included: (i) the use of new materials (plastics, fiberglass, Kevlar, carbon fiber, new alloys) to help provide lighter, stronger, and more durable equipment; (ii) the introduction of wider oar blades; (iii) the introduction of adjustable riggers; (iv) changes in the dimensions of rigging and slides; and (v) innovations in hull shape. Major changes in rowing styles and training methods have also occurred. These include: the delayed recovery and faster slides of the modern international style; increased attention to rigging dimensions and to the adjustment of rigging for specific conditions and individual physiques; and the use of weight training, interval training, and a variety of other training methods. At the same time, as in sailing, new materials and technology have led to new forms of recreational equipment, which in their turn have led to new classes of competitive activity.

Despite this growth in numbers and activity, and despite the recent rapid progress in technique and training, there does not appear to have been a comparable development of theoretical understanding of the mechanics (and physiology) of rowing. We believe that the thoretical study described below can be an important step towards filling this gap.

MODELS FOR ROWING

A successful theory of rowing would develop models and principles from which one could do the following:

(i) obtain an explicit and rational foundation for those current coaching beliefs and practices which are, in fact, correct;

(ii) calculate in numerical form the consequences and trade-offs that will occur when equipment or technique is modified;

(iii) deduce (from theory) the approximate optimal form and dimensions of racing equipment;

(iv) provide useful new coaching insights and principles;

(v) suggest directions for the development of new forms of rowing and training equipment; and

(vi) develop better instrumentation for measuring performance (in boats and on training equipment).

In what follows, we shall describe, in some detail, a first step toward such a theory and indicate further steps that we plan to take. We shall, in this example, consider the eight-oared racing boat in its conventional present form. The mechanical system consists of boat, oars, rowers, and the water and air through which the boat and rowers move. There are three distinctive features of this system that give unique quality and importance to rowing style and technique. These are:

(i) the non-linear relationship between boat speed and boat drag;

(ii) the non-linear relationship between slippage (speed through the water) of the oar blade and the force of the blade on the water; and

(iii) the impedance match between rower and equipment (the extent to which motion of equipment and motion of the human body are adapted to each other to promote the flow of power from body to equipment).

We note in passing that if the relationships in (i) and (ii) were in fact linear, rowing would lose much of its distinctive character. In engineering terms, a simple superposition principle would hold, and rowing style would have no purpose other than helping to achieve a good impedance match for each rower. Each rower would make his or her own independent contribution, regardless of style, to the speed of the boat. These contributions would directly add, and the speed of a boat would be directly proportional to the combined efforts of its rowers. In other sports, such as bicycle racing and track and field events, style and technique are almost entirely concerned with the achievement of good impedance match. In rowing, it is the central role of the non-linearities in (i) and (ii) that give the sport much of its distinctive character. Many rowing coaches are conscious of the non-linearity in (i). Fewer, however, appear to be aware of (ii). As we shall see, (ii) is more important than (i) in determining the essential characteristics of good rowing style.

Cont. on Page 6

IN THE NEXT ISSUE OF *HUMAN POWER*:

We have been promised a paper from John Langford about the MIT Team's success with the *Monarch* HPAircraft - winner of the third Kremer prize for human-powered flight.

Dr. To of The Airplane Company will be reporting on his inflatable aircraft.

A review of human-powered boats is promised from Shields Bishop.

Submissions for *Human Power* should be sent to:

David Gordon Wilson
Editor, *Human Power*
15 Kennedy Rd.
Cambridge, MA 02138

The deadline for the Spring 1985 issue, and composition recommendations, may be obtained from the above address.

THE *DORYCYCLE*: PEDAL POWER AND SCREW PROPULSION IN A TRADITIONAL WATERCRAFT

by Philip Thiel

ABSTRACT

The *Dorycycle* was designed as an experiment in the use of "lo-tech" components for the application of pedal power and screw propulsion to a traditional seaworthy watercraft. The goal was to develop a recreational cruising boat of moderate cost and reasonable performance, within the construction capabilities of a competent layperson.

The Dorycycle weighs 1300 Newtons (300 lb) on a waterline length of 3.96m (13 ft), and powered by a single "healthy adult" will carry 890 Newtons (200 lb) at 2 m/s (4.5 mph) in smooth water for one hour. The cost of materials and parts was about $800.

INTRODUCTION

To live in the Pacific Northwest and not have a boat is certainly unnatural and possibly immoral. But what does one do if one does not care to cope with the whims of the wind, suffer the noise and odor of a motor, or deal with electrical complications? Human power is the obvious answer - the original "lo-tech" and most biologically benign means of motion.

Paddles and oars have been used for locomotion on the water since the beginning of time, and have much to recommend them for simplicity and economy. But just as in the use of the wheel in land transportation, with a similar moderate increase in complexity and cost, the conversion of muscle power into motive thrust may be more effectively and agreeably accomplished with the use of pedal power and the screw propeller. The advantages result from the fact that in this case the user operates the boat while comfortably seated, facing forward, with hands free except for an occasional rudder correction, and converts the torque from leg-muscle power to the uniform and continuous thrust of the efficient submerged screw propeller.

The purpose of the present investigation was to test the use of conventional mechanical components and a simple hull-form to produce a pedal-powered and screw-propelled seaworthy recreational craft of moderate cost and reasonable performance, within the construction capabilities of a competent layperson.

HULL

A New England background suggested the advantages of the traditional (Grand) Banks dory, a time-tested craft well-proven in deep-sea work-boat service (Chapelle, 1951; Gardner, 1979). This easily-constructed model has a single-chine simplified form with a narrow flat bottom, flaring sides, raking ends, and a strong sheer. The Dorycycle is 4.9m (16 ft) long overall, and 1.3m (4 ft, 3 in.) maximum beam. It is 3.96m (13 ft) on the waterline and 0.76m (2 ft, 6 in.) maximum width on the bottom. Atypical appendages are a cutaway skeg providing directional stability, lateral plane, and propeller protection; and a galvanized welded-steel stern frame bolted to the hull and the skeg. The draft aft is 530mm (21 in.). Sides and bottom are constructed of fir marine plywood, 6mm (1/4 in.) and 9mm (3/8 in.) respectively, and the framing and trim are of oak. The outboard rudder is provided with a yoke, and controlled by lines carried forward through oarlocks to an elastic cord under the seating structure. Flotation in the form of foam is fitted below the seats at the bow and stern, and also provided by plastic fenders lashed along the sides amidships (Fig. 1 and 3). Total weight, including one pair of emergency oars, power train, and seating, is 1330 Newtons (300 lb).

POWER TRAIN

The propelling mechanism (Fig. 2) is carried on twin fore-and-aft wooden members parallel to the inclined shaft, and consists of a transverse pedal shaft in ball-bearing pillow-blocks carrying two 230mm- (9-in.-)diameter die-cast V-belt pulleys, one keyed to the shaft and the other bronze-bushed as an idler. A standard v-belt runs over them with a twist to a 63.5mm- (2.5-in.-)diameter bronze-bushed idler on an adjustable take-up shaft in a slotted vertical wood strut, and to a similar-size driven pulley keyed to the 19mm (3/4 in.) bronze propeller shaft. A flanged thrust-and-steady roller-bearing in a second vertical strut carries the forward end of the shaft, which runs aft through the hull in a standard bronze shaft log and stuffing box to a bronze rubber-bushed bearing in the stern frame. The pulley ratio is 1:3.6, so that at 60 pedal rpm the propeller turns at 216 rpm.

PROPELLER

The propeller is three-bladed, 406mm (16 in.) in diameter and 610mm (24 in.) in pitch, with a developed-area ratio of 0.53 and a blade-thickness ratio

Cont. on Page 6

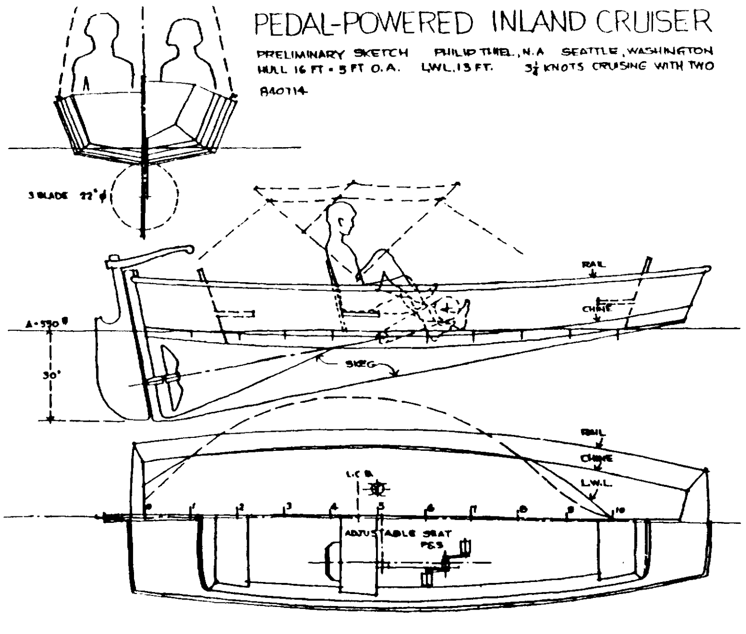

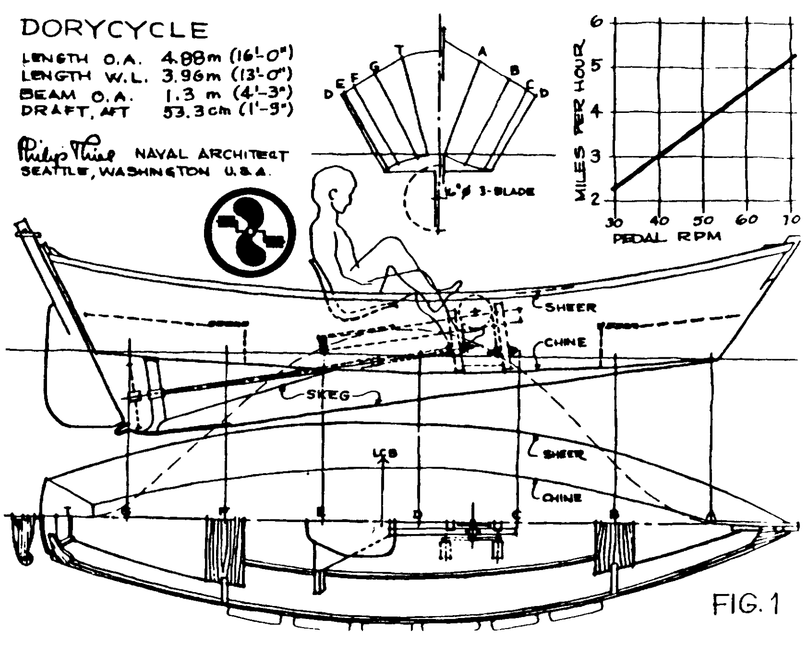

FIG. 1

THE *DORYCYCLE*: PEDAL POWER AND SCREW PROPULSION IN A TRADITIONAL WATERCRAFT

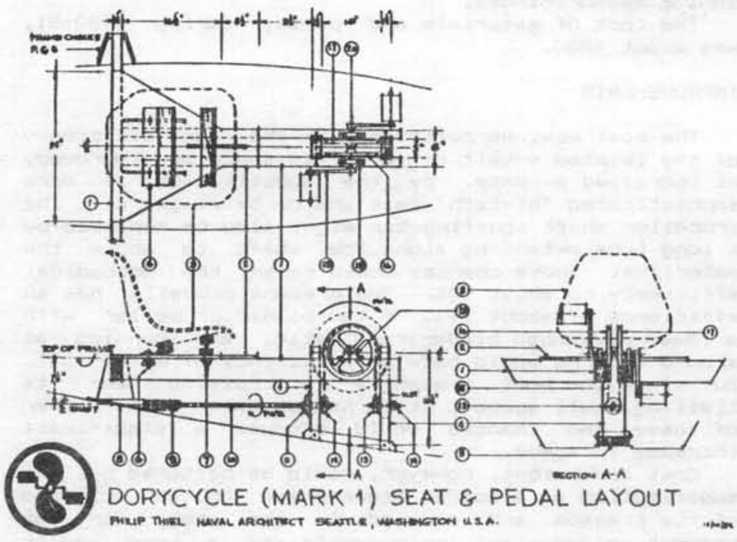

DORYCYCLE (MARK 1) SEAT & PEDAL LAYOUT
PHILIP THIEL NAVAL ARCHITECT SEATTLE, WASHINGTON U.S.A.

FIG. 2

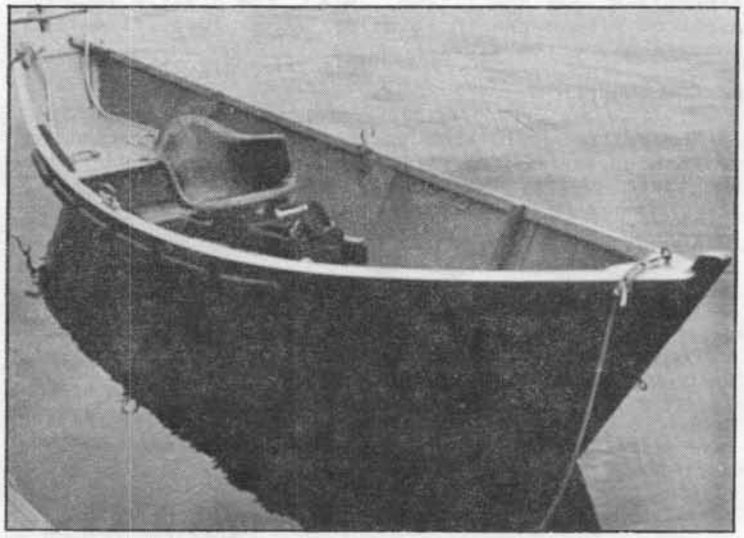

FIGURE 3 Overall view

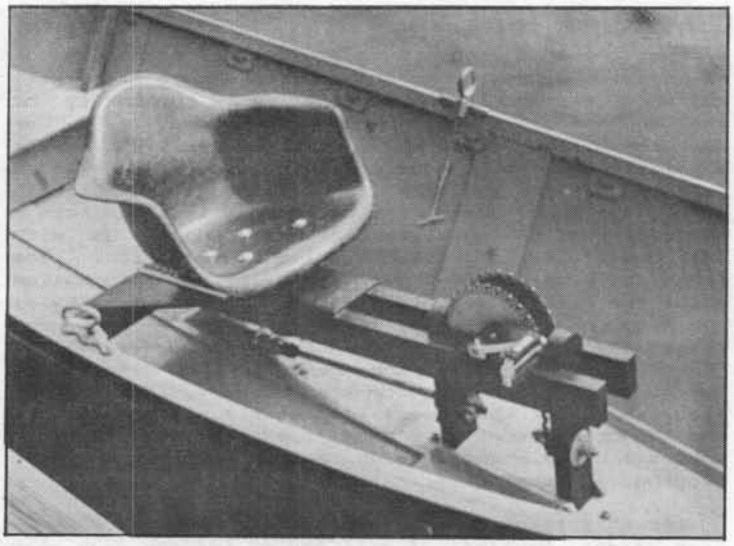

FIGURE 4 Seating arrangement

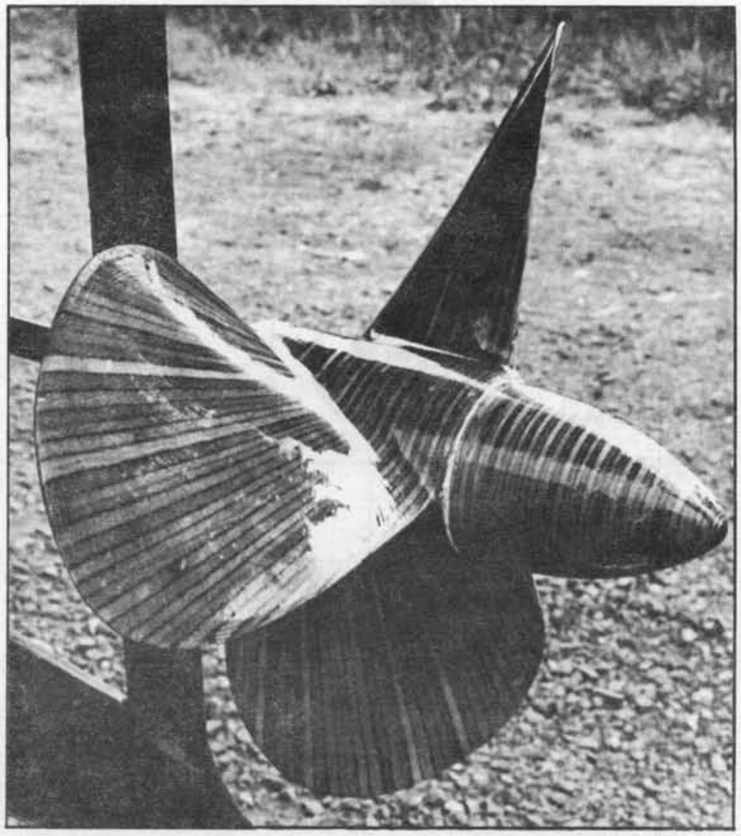

FIGURE 5 Laminated wood propeller

From Fred DeLong DeLong's Guide to Bicycles and Bicycling
Radnor, Pennsylvania: Chilton Book Co., 1978

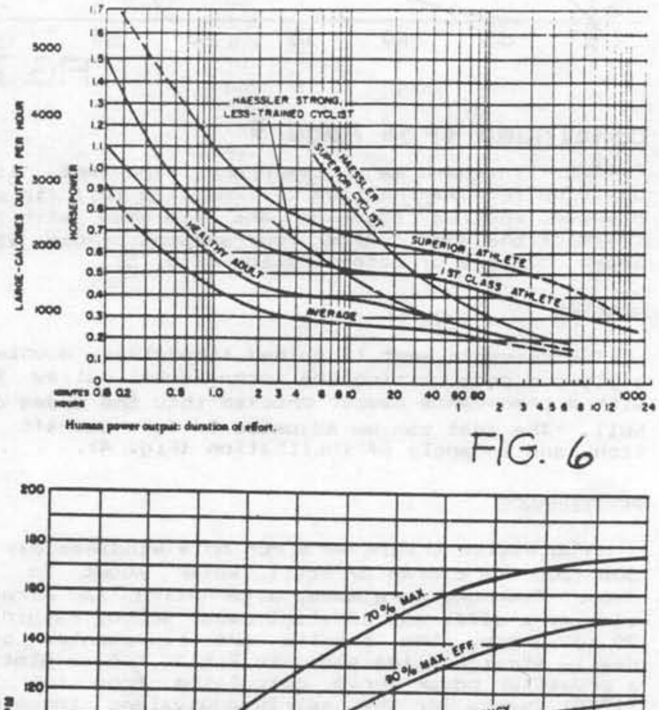

Human power output: duration of effort.

FIG. 6

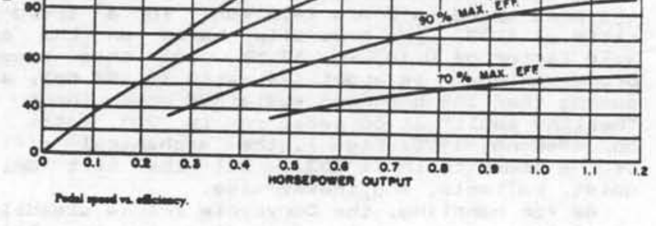

Pedal speed vs. efficiency.

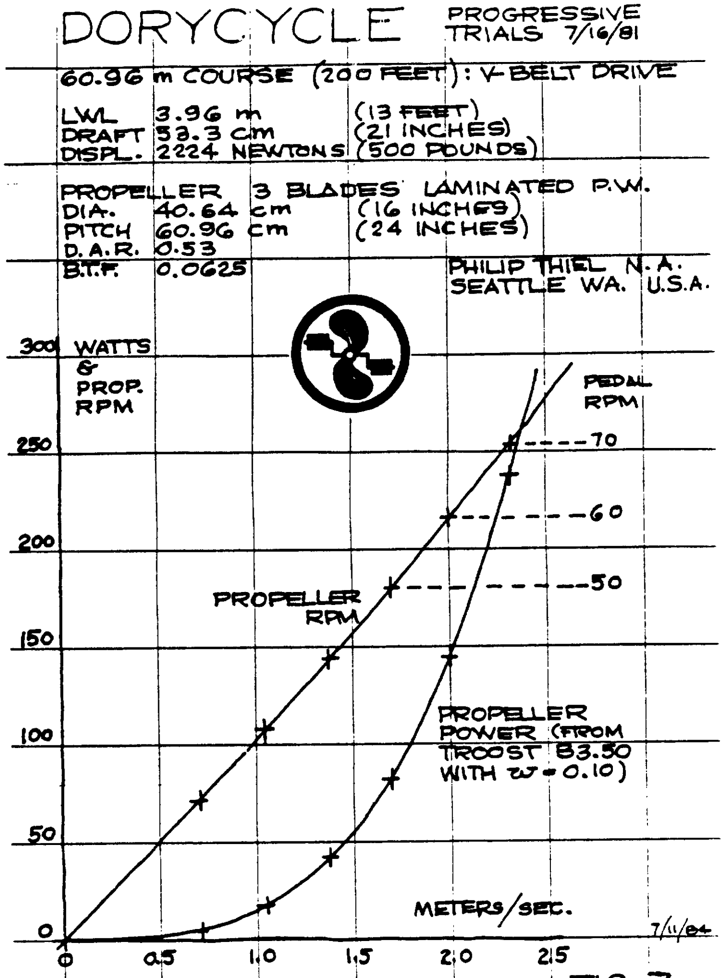

FIG. 7

Continued from Page 5

0.0625. Intended as a temporary expedient, it was built up from laminations of 12mm (1/2 in.) fir marine plywood, epoxied together and finished with three coats of the same. After four seasons of use it has shown no signs of deterioration (Fig. 5).

SEATING

The driver's seat is molded fiberglass, mounted on a plywood deck uniting the fore-and-aft pulley frames with a transverse member chocked into the sides of the hull. The seat can be adjusted in fore-and-aft position, and in angle of inclination (Fig. 4).

PERFORMANCE

Progressive trials were run on a windless day on a 60m (200-ft) course of still water about 2m (7-ft) deep. Ten runs were made, alternating in direction, each at a different constant pedal speed, ranging from 20 to 70 rpm. The results are represented by the nearly straight line shown in Fig.7 . Also plotted is a propeller power curve calculated from the Troost (1950) charts for the nearly-equivalent three-bladed model of 0.50-developed-area ratio, assuming a wake factor of 0.10.

At the sustainable cruising speed of 60 pedal rpm, the boat speed is 2 m/s (4.5 mph), for a speed-length ratio of 1.08. The true slip, based on the assumed wake factor of 0.10, is 17.5%. At this speed the propeller power is about 144 watts (0.194 hp), and assuming that the one-hour sustained power input for a "healthy adult" at 60 pedal rpm is 205 watts (0.275 hp) (DeLong, 1978: Fig 6), the mechanical efficiency of the power train is 70%. But the belt drive is quiet, reliable, and inexpensive.

As for handling, the Dorycycle tracks steadily on a straight course, yet is responsive to the helm and maneuvers well ahead and astern. When in heavy chop, or in a wind and tide rip, even when loaded with three people it performs creditably and inspires confidence in its seaworthiness.

The cost of materials and parts, during 1980-81, was about $800.

IMPROVEMENTS

The most obvious deficiency is the low efficiency of the twisted v-belt drive. This could be improved, at increased expense, by the substitution of more sophisticated "hi-tech" belt and/or bevel gears. The propeller shaft stuffing-box might also be replaced by a long tube extending along the shaft to above the waterline. These changes could raise the mechanical efficiency to about 90%. The present propeller has an efficiency of about 77%. A two-bladed propeller with a lower developed blade-area ratio, and running at around 600 rpm would have an efficiency of about 85%. But since the boat presently is cruising near its limiting "hull speed", it is not certain that either of these two changes would produce a significant increase in speed.

Cost and weight, however, could be bettered by the substitution of a wooden stern-frame bolted outboard of the transom and secured to the skeg, for the present welded-steel arrangement; and a wood and/or cloth seat would weigh and cost less than the heavy fiberglass seat now fitted. Also, the plastic fenders might be eliminated in favor of more foam flotation inboard along the sides.

ACKNOWLEDGEMENTS

The author would like to express his appreciation to Shields Bishop, Larry Hahn, and E. Eugene Larrabee for their advice, assistance, and encouragement.

REFERENCES

Chapelle, Howard I. American Small Sailing Craft New York: Norton, 1951
DeLong, Fred DeLong's Guide to Bicycles and Bicycling Radnor, Pennsylvania: Chilton, 1978
Gardner, John The Dory Book Camden, Maine: International, 1979
Troost, L. *Open Water Test Series with Modern Propeller Series*, North-East Coast Institution, 1950-51

Philip Thiel
4720 7th Ave NE
Seattle, WA 98105

A THEORETICAL STUDY OF ROWING

Continued from Page 3

Most previous attempts to analyse the mechanics of rowing have attempted to construct a single mathematical model that would reflect the full complexity of the mechanical system under consideration. Our approach will be different in that we shall begin with a relatively simple model and then go on to construct a series of more and more complex models. At each stage, the model under consideration will illuminate a new aspect of rowing style and will supply us with both qualitative and quantitative information. The first and simplest of these models gives information about the most fundamental feature of rowing style; the need for a *long and smooth stroke*. Subsequent stages and models will concern the role of *weight* (of rowers and equipment), the need for a *hard, fast catch*, the form and pace of the *recovery*, the need for *simultaneity* of the rowers (especially at the catch), and the achievement of a good *impedance match* between rowers and equipment through appropriate dimensions, rigging, and timing.

(At this point I am cutting in and will leave you, dear reader, hanging. I will try to let you know when and where Hartley Rogers publishes his complete theory. I will encourage him or Alec Brooks or anyone else to publish the complete theory of human-powered hydrofoils. It is, though, complex. - Ed.)

THE *FLYING FISH* HYDROFOIL

Continued from Page 1

to actually lift the hull out of the water. He reported that his boat actually went faster with the foils removed.

At this point, Allan had the idea of simply not having a hull of any kind, and attaining flying speed by catapult-launching from a floating ramp. Using this launching method, the hydrofoil-wing design would not have to be compromised. Satisfied with this approach, we began to work in earnest in December, 1983, on what would eventually become the *Flying Fish*. The project had two main tasks - developing a stable and controllable configuration, and the detailed hydrodynamic design of the wings and propeller.

TESTBED VEHICLE

At the outset we decided that the hydrofoil should be easy to ride, and be as similar as possible to a normal racing bicycle, so that a top racing cyclist could easily ride it. This suggested using a standard 10-speed frame, with hydrofoil attached in approximately the same locations as the wheels normally are. The rear hydrofoil would be located directly under the seat, providing 90 percent of the total lift. The front foil would be mounted on the forks, and would provide pitch and depth control, as well as turning control. The propeller would be mounted at the intersection of the rear foil and its single supporting strut.

We didn't know whether this configuration was workable, and were especially concerned with the 'bicycle' approach to balancing. To test these ideas, we built a simple wood-winged testbed vehicle around a junk bicycle frame. To avoid the time required to build a drive system and launching ramp, the testbed was towed behind a motorboat. Initial tests were successful and very encouraging. The 'bicycle' balancing worked beautifully, and the pitch and depth control were adequate using a surface-piercing 'V' foil in front. The 'V' foil did, however, create a lot of drag and spray. This was unacceptable to us, so the search for a better front-foil system began. For two months we made early-morning trips to the lake to test ideas. Allan was the chief 'test pilot' and I observed and took measurements from the tow boat. Jim Burke, a scientist at the Jet Propulsion Laboratory and HPV enthusiast, provided the essential tow boat and many valuable observations during this phase.

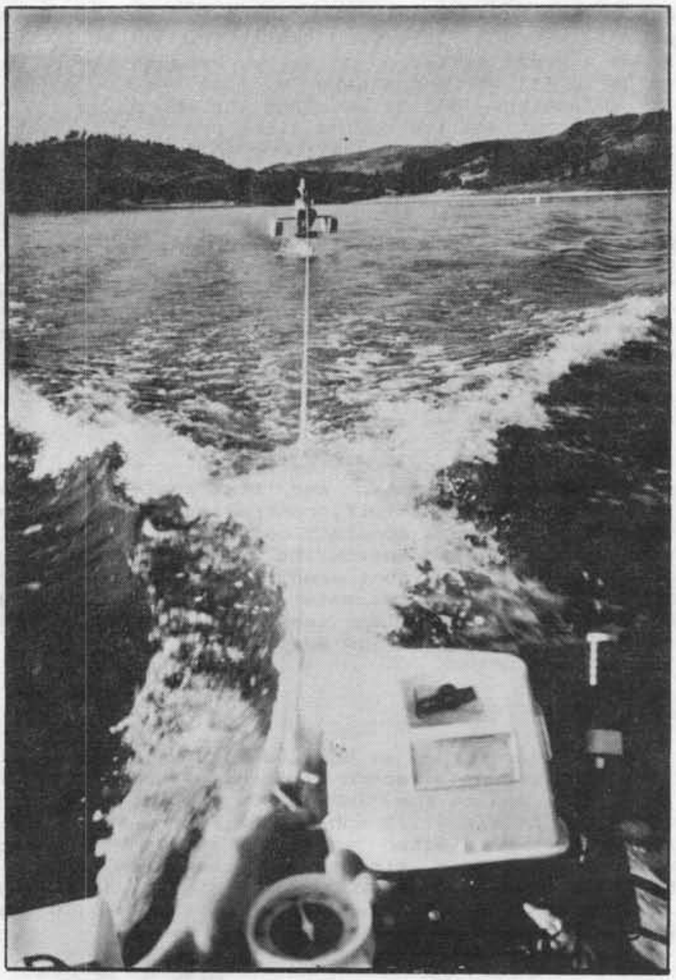

Towing the wood-winged testbed vehicle. Speed is about 8 mph, drag on fish scale reads 20 lb. The final version has about 8 lb of drag at this speed.

The final front-foil configuration that emerged from these tests was an inverted 'T', with active depth control. The system utilizes a small surface follower that skates over the water surface. It is connected by pushrod to a small flap on the front wing. When the craft sinks lower into the water, the surface follower is pulled up, causing the flap to be pushed down, increasing the lift of the front foil. The 'ride-height' is thus constantly adjusted by the surface follower.

HYDRODYNAMIC DESIGN

The hydrodynamic design phase occurred at the same time as the testbed vehicle testing. The main problems were sizing the wing and design of the propeller.

The primary consideration of the wing design was its chord and span. Large span was desired to minimize induced drag, and small chord was desired to reduce skin-friction drag. Taken together, these requirements dictated a slender (high aspect ratio) wing. Since the design called for only one wing-support strut in the middle of the span, the bonding stresses in the wing would be quite high. This called for a fairly strong and stiff material. Several materials were considered. Wood was initially the material of choice because of its ease of fabrication, but was ruled out due to its low strength and stiffness, and its propensity to warp. Fiberglass was strong enough and easy to fabricate, but much too flexible. Aluminum had the right properties, but was difficult to work with. (Cost estimates for numerically milling the wing from a block of aluminum started at $5000.) The final choice was carbon fiber. It had adequate stiffness, excessive strength, and could be moulded like fiberglass. The only disadvantage was the high cost - about $50 per pound ($110 per kg).

To ease construction, an untwisted wing and flat-bottomed airfoil were desirable. The NACA 4415 airfoil has a nearly flat bottom and very good performance in the Reynolds-number range of interest. A 4415 modified to have a flat bottom was therefore selected. The optimum ratio of tip-chord to root-chord for a straight-taper untwisted wing was calculated to be 0.4. All that remained was to select the optimum wingspan and aspect ratio.

I wrote a computer program to calculate the speeds, power requirements, and root bending stresses as a function of aspect ratio and span. (The root bending stress is strongly a function of the aspect ratio and span.) We wanted to optimize the design for a 2000m timed run, so we looked for solutions at a power level of 410 watts (0.55 hp). (This is representative of what a very good athlete can put out for 6 minutes.) Additional calculations were made to determine the flexural deflections of candidate wings. The results showed that as the allowable bending stress is increased, the span and aspect ratio increase, the wing area decreases, and the speed increases. It was found that highly stressed wings, while theoretically the fastest, would have unacceptably large deflections under load, and would be prone to flutter. A reasonable compromise was found at a root stress of 69 MPa (10,000 psi), which dictated a span of 1.8m (72 in.) and an aspect ratio of 22.

The propeller was designed to absorb 900 watts (1.2 hp) at 4.9 m/s (11 mph), with high overall efficiency. The design power level was purposely set quite high, to prevent the prop blades from stalling at the torque peaks of the pedalling motion. Other design criteria included a minimum allowable tip pressure (to prevent cavitation), and a minimum blade chord (for structural strength). The actual propeller design was performed using a second-generation optimum propeller code at

Cont. on Page 8

THE *FLYING FISH* HYDROFOIL

Continued from Page 7

AeroVironment, Inc. The final design has a diameter of 406 mm (16 in.), advances 690 mm (27 in.) per revolution, and is 88 percent efficient at the design point.

CONSTRUCTION

Construction of the Flying Fish was fairly straightforward, but rather time-consuming. The wing was constructed using a wet-layup of carbon fiber and epoxy in a styrofoam female mold. This was fast, but the surface finish out of the mold was rough, and required extensive filling and hand-sanding. The propeller blades were built by laying up carbon fiber and fiberglass in a fiberglass female mold. Steel rods embedded in the blades were clamped into an aluminum hub, and carbon fiber was added to the outside for reinforcement.

The front wing and strut assembly, not as highly stressed as the rear wing, was carved out of mahogany and covered with a thin layer of carbon fiber.

The main vertical strut that mounts the wing to the bicycle frame was fashioned from a piece of aircraft strut tubing. The wing was glued into a fitting on the leading edge of the strut, and reinforced with carbon fiber. The strut was covered with a streamlined foam-and-fiberglass fairing to reduce drag. This whole assembly bolts into the bicycle frame.

The bicycle frame is nearly stock - the only modification was to extend the head tube forward about 600 mm (2 ft) to reduce the pitch sensitivity. The propeller is driven by a long 6.3 mm- (0.25 in.-)pitch chain that runs through the vertical strut. The 90-deg. rotation of the motion is done in the chain. The chain was assembled with a half-twist to make it a 'Mobius loop.' This makes it naturally hang with a perfect 90-deg. twist. The overall ratio between the pedals and propeller is about 4 to 1.

Styrofoam flotation was added to the frame triangles to prevent the 'Fish from sinking at the end of each flight. The weight of the completed vehicle is 18 kg (39 lb).

The launching ramp was made by screwing several 6m-(20-foot-)long pieces of wood together to form channel sections. A wooden dolly on skateboard wheels rolls in the channels. The 'Fish attaches to the dolly at three points, and employs a release mechanism that holds it firmly to the dolly until the dolly reaches the end of the ramp. At that point, a rope pulls tight, actuating the release mechanism, and stops the dolly. The ramp is tied at one end to a convenient dock. The other end is supported by simple floats. Ropes through pulleys at the front of the ramp allow a person on the dock to pull the dolly forward for launching the 'Fish.

FLYING

The Flying Fish has performed very well, after a few 'teething' problems with the very small 12-tooth sprocket on the propeller shaft. It has gone faster every time it has been run.

Judging speeds on water is quite difficult. Our initial experiences in the motorboat were that we would consistently overestimate the speed (e.g. what seemed like 14 or 15 mph was really only 8 mph.) To get an honest speed indication, we built a simple water manometer out of brass and clear plastic tubing. The speed can be directly calculated from how high the water is forced up the tube by the ram pressure on the Pitot tube underwater. The top of the manometer was 1.8m (6 ft) above the water surface, corresponding to about 6 m/s (13.5 mph), well above the speeds we expected to see.

Allan was the pilot for the first run with the manometer. His plan was to sprint straight out of the launching ramp to try to achieve the highest possible speed. The launch went smoothly, but it was immediately apparent to observers on the dock that a hose clamp at the bottom of the manometer was dragging in the water, creating a large rooster tail. This was surely causing considerable drag and would limit the speed.

Meanwhile, Allan was intently watching the water level in the manometer. Out of the launching ramp, the speed was about 3 to 3.6 m/s (7 or 8 mph). Soon, the water level was indicating 4.9 m/s (11 mph). He bore down harder on the pedals, and watched the level rise to 5.8 m/s (13 mph). He accelerated again in a final effort, and saw the level rise until water shot right out the top of the manometer! With the manometer removed, and with a champion sprinter riding, speeds of 7.2 m/s (16 mph) are foreseeable.

What's a ride on the Flying Fish like? You begin by carefully climbing on, after it has been mounted on the launching dolly. Pull the toe clips moderately tight, and try spinning the pedals. You immediately notice that it takes very little effort to turn the propeller. After signalling 'ready' to the launch crew, a countdown begins at 5. At a count of 1, you start pedalling fast. At 0, you feel a tremendous acceleration as the dolly surges forward. Then suddenly everything is very smooth and quiet. There is not a great sensation of speed, because your eyes are 2m (6 ft) above the water surface and there isn't much splashing. But by watching the shoreline go by, you know that you are moving along pretty quickly. It now takes considerably more force to turn the propeller, as it gets a better 'bite' on the water. Balancing is very easy. In fact, it seems to only want to go straight. Lots of body English and a little opposite rudder are required to start a turn. After turning around, a mild sprint sends you shooting past the cheering spectators on the dock. Now it's time for some low-speed work to test out the minimum power requirement to stay up on the foils. As the speed drops off, pedalling becomes much easier. Suddenly the front foil is out of the water, and all control vanishes. Splash!! You're in the water, victim of one of Flying Fish's few vices.

As the speed decreases, the rear wing sinks deeper and deeper into the water and its angle of attack increases. The front foil, controlled by the surface follower, rides at a constant depth. As a result, the 'Fish tilts back and shifts its weight entirely onto the rear wing. The front wing, still lifting, unloads and shoots up out of the water, resulting in a near-certain splash. The rider can prevent this only by leaning far forward at low speeds.

WHAT'S NEXT?

In the near future we hope to make attempts on the 2000m single rowing record of 6min, 49sec; 4.89 m/s (10.94 mph) and on the IHPVA 50m sprint record of 8.95sec; 5.59 m/s (12.5 mph). The future for unlimited human-powered water vehicles is very exciting. Carefully optimized single-rider vehicles might be able to break the 8-man 2000m record of 5min 32 sec; 6.03 m/s (13.5 mph) and exceed the 9 m/s (20 mph) 'barrier' in sprints.

Alec N. Brooks
678 S. Oak Knoll
Pasadena, CA 91106

IHPVA BIBLIOGRAPHY OF PREVIOUS HPB ARTICLES

DESIGN OF HUMAN-POWERED BOATS, Randy Danta,
HUMAN POWER vol 1 #1 Winter 1977-78

NO BOATS ABOUT IT, Lonnie Cope
HPV NEWS vol 1 #7 December 1983

DESIGN OF HP BOATS, Norman Benedict
HPV NEWS vol 1 #7 December 1983

WATER DIVISION NEWS, anon.
HPV NEWS vol 1 #9 March 1984

NOTES ON BOATS, Norman Benedict
HPV NEWS vol 1 #10 April-May 1984

HPBs GET WARM ATTENTION AT COLD NEWPORT EVENT
(Newport Boat Race), David Wilson
HPV NEWS vol 2 #1 August 1984

MADELINE: A PEDALLED SIDEWHEELER

by Phillip C. Bolger

For a long time I've deliberately cultivated a habit of looking at any device with an eye to making it cruder, if possible with a minimum sacrifice of performance. I like oars and paddles because they're crude, not only in the sense that they're primitive in principle, but also in not being demanding in use. They can be buried in mud and bounced off rocks, and stroked in ice or weed. They are extremely handy for manuevering, and I tend to shy away from any improvements that degrade that quality. Even ordinary outriggers strike me as out of keeping with what rowboats do best, namely to go where power and sailing boats can't. The double paddle does this better still, and that's what I've used most myself in recent years. The single paddle is best of all, and I'm thinking of changing to that.

My attitude about propellers is that they're something you have to put up with if you want to use a motor. One of the leading advantages of a rowing boat is that it will work without a propeller. Now and then I've toyed with the idea of a reciprocating propeller on the scull or yuloh principle, but I've never worked out a clear idea of an experiment worth trying in this direction.

When Peter Hoe Burling asked me about a pedal boat I didn't give him much encouragement, but I let him bribe me into just having a look at the problem. The assumption was that it would be a sternwheeler, but I came up with nothing that was of much interest in that direction. I was intrigued to find that if the wheel was about three feet (about a meter) in diameter, it did not need any gearing; it could be pedalled straight on to the wheel shaft. This led to the ultra-simplified sidewheeler, *Madeline.*

I thought she could be steered and maneuvered by listing her, the crew leaning away from the intended turn, to lift the wheel on the inside of the turn more or less clear of the water, and give the outside wheel more bury. The twin steering oars were partly on a suspenders-and-belt principle, to allow the boat to be rowed around, pushed sideways, or ferded off of obstructions. As with numerous other attempts I've made to use steering oars, the owner and everybody else disliked them, and required me to design a rudder for the boat.

Barring the steering oars, *Madeline* got enthusiastic reports from everyone concerned. Dynamite Payson, the builder and an experienced boatman, had been skeptical of her performance, but said flatly that he could pedal her much faster and farther than he could have rowed a similar hull. He has rowed hulls of a similar type, a lot. He estimated her flank speed as seven knots (3.6 m/s), which I'm diffidently skeptical about, having hoped for five knots, and being resolved not to apologize if it was three. The hull is easily driven, and apparently the wide wheels, giving considerable blade area on a small dip, are fairly efficient.

I haven't heard of any trials she may have had in choppy water and strong winds. It's possible that the continuous thrust might compensate for the wind resistance of the paddle boxes to some extent. She must be practically as good as a rowing boat in dealing with obstructions in the water. The wheels were given a slight dip below the bottom of the hull to allow her to "walk" in shallow water.

Though *Madeline* is considered a great success, there has not been a great rush to duplicate her, if only because her "machinery" was very expensive compared with a couple of pairs of oars. If there's improved performance, it's not of much consequence for the usual uses of human-powered boats, whereas the degradation of handiness and compactness is substantial.

My personal interest in increasing speeds by minute increments is slight. I hope nobody will take that as a slur on anyone else's taste; the statement is not meant to mean more than it says. If I had to try to get more speed out of a human-powered boat and could count on calm conditions, I would at least have a look at what might be done with very large paddle wheels with a proportionately small dip; I would also look, of course, at feathering wheels which get the same effect with much less wind resistance.

Phillip C. Bolger
250 Washington St.
Gloucester, MA 01930

PROPELLERS FOR HUMAN-POWERED VEHICLES

by Prof. E. Eugene Larrabee

The puny output of the human animal - between 200 W (hard work) and 800 W (heroic effort) - requires efficient propellers if pedal-driven watercraft are to achieve useful speeds or if aircraft are to fly at all. The general shape of highly efficient propellers is seen on the best piston-engine airliners of the 1930s; by contrast the geometry of motorboat and steamboat propellers is driven by practical constraints on diameter (always too small), and low permissible blade loading (cavitation damage). Traditional marine propellers are seldom more than 75% efficient, but good air propellers may approach 90% efficiency. Therefore the designer of human-powered boats should look for guidance to the vast body of aeronautical propeller theory; it is based on a vortex model of blade operation similar to that for airplane wings.

VORTEX PROPELLER THEORY

Vortex propeller theory is the next step up in sophistication from the *actuator-disc* or *momentum* theory of Rankine and Froude, developed in the 19th century. In actuator-disc theory, the propeller is assumed to create a uniform slipstream flow devoid of rotation; such a slipstream would have minimum kinetic-energy loss for a specified boat speed, propeller diameter, and thrust. Vortex theory takes the more realistic view that a practical propeller has a finite number of blades rotating about a central shaft to create a cyclic, swirling slipstream. This flow will contain more kinetic energy than a uniform slipstream for a given thrust because of swirl and non-uniform velocity components; nevertheless, there is a certain radial distribution of blade lift that minimizes slipstream kinetic-energy loss for a specified number of blades, vehicle speed, shaft speed, propeller diameter, and thrust. This radial loading is called minimum-induced-loss loading, and is related conceptually to the elliptic span loading of a monoplane wing that minimizes the kinetic energy of wing vortex wake flow for a specified flight speed, wing span, and lift, thereby minimizing the induced drag. Vortex propeller theory, like vortex wing theory, was developed by Ludwig Prandtl and his circle at Goettingen during World War I.(1)

The vorticity in wing and propeller theories has its origin in the lift of airfoil (or hydrofoil) surfaces. According to the 1911 Kutta-Joukowsky (ЖУКОВСКЙИ) theory of airfoils in spanwise uniform flow(2), the lift per unit span (or radius), N/m, is given by:

$$dL/dr = \rho W \Gamma = (1/2)\rho W^2 c c_l \qquad (1)$$

Cont. on Page 10

Continued from Page 9

where ρ is the fluid density, kg/m^3; W is the fluid velocity, m/s; Γ is the vorticity, m^2/s; c is the airfoil chord, m; and c_ℓ is the lift coefficient. The value of Γ, the *bound* vorticity, is determined by viscosity in the airfoil boundary layer, which aligns the flow with the airfoil trailing edge.

Since the blade lift must vanish at the tips and at the shaft centerline, Stokes proposed a theorem requiring that trailing vortices, aligned with the local flow, be shed by the individual blades in such a way that the change of bound vorticity between blade elements at radii r and $r + dr$ appears as trailing vorticity, as shown in Figure 1. The entire array of radially varying vorticity, bound to the blades, and trailing vorticity, arranged in helicoidal vortex sheets, may be modelled by a geometrically similar array of current-conducting wires. The magnetic field "induced" by such an array, and calculated by the Biot-Savart law$^{(2)}$ is in every way analogous to the velocity field induced by the vortex array; at the blade elements in particular, the velocity field operates to change their angle of attack. This is the essence of vortex propeller theory.

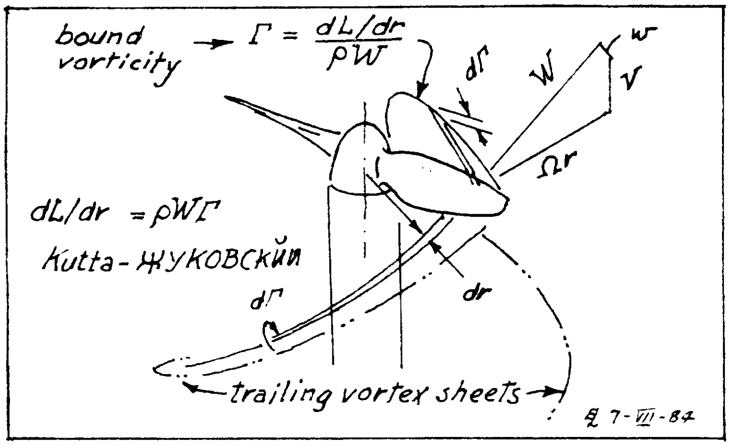

Fig. 1 Relation between bound and trailing vorticity (Stokes' Law).

INDUCED VELOCITIES FOR MINIMUM INDUCED LOSS

For the special case of minimum-induced-loss loading, the induced velocities have the simple form shown in Fig. 2. All of the resultant velocities, W_η, at each of the blade elements (which depend on the induced velocities w_η), appear to focus on a central velocity $V + v'/2$. The velocity v' is called the displacement velocity; its half-value can be identified with the *slip* of traditional, pre-vortex, marine-propeller theory. The blade-element angle of attack, α_η, is given by the difference between the geometric blade angle, β_η, and the helix angle of the local relative velocity, ϕ_η.

Figure 3 shows some radial bound-vorticity distributions corresponding to minimum-induced-loss loading, which give rise to radially constant displacement velocity. They are functions of the advance ratio, $V/\Omega R$ (where Ω is the shaft speed and R the tip radius), and the number of blades, B. The quantity $G = B\Omega\Gamma/2\pi V v'$ (G for Goldstein) not only is a dimensionless measure of the bound vorticity Γ (B, the blade number; Ω, the shaft speed; V, the flight speed; and v', the displacement velocity; are all constants), but G is also approximately equal to the ratio of average axial velocity increase in the slipstream to the displacement velocity; in other words, by making the tip helix angle small and the blade number large, the induced losses approach those of an actuator disk. Note that Fig. 3 contains two estimates of G: the approximate ones of Betz and Prandtl$^{(1)}$ and the improved ones of Goldstein.$^{(3)}$ If the perpendicular spacing of the helicoidal vortex sheets at their outer edges is less than the propeller radius, the much simpler Betz-Prandtl estimate can be used, except near the hub. My propeller-analysis methods exploit this idea.$^{(4)}$

PROFILE LOSSES -- PROPELLER DESIGN

Individual blade elements have profile drag (mostly skin friction) which keeps the resultant blade load from being normal to the local helix angle by the *glide angle* $\epsilon = \arctan(c_D/c_\ell)$. The efficiency of a blade element can be shown to be:

$$\eta_{el} = \left[\tan\phi/\tan(\phi+\epsilon)\right]\left[(1-a')/(1+a)\right] \cong \left[\tan\phi/\tan(\phi+\epsilon)\right]\left[(1/\left[1+(v'/V)/2\right])\right] \qquad (2)$$

where aV and $a'\Omega R$ are the axial and swirl components, respectively, of the induced velocities at the blade elements. The quantity $\tan\phi/\tan(\phi+\epsilon)$, the *profile efficiency*, has a maximum if $\phi = \pi/4 - \pi/2$; therefore the most heavily loaded part of the propeller, near 80% radius, should operate at this helix angle to minimize the profile losses. This result is in conflict with minimizing induced losses, so a propeller of highest efficiency must incorporate some kind of compromise to minimize the *sum* of induced and profile loss.

To design such a propeller by my method, first choose a design point characterised by a certain vehicle speed, shaft speed, and shaft power. Next select a reasonable diameter, say that given by:

$$P_c = 2P/\rho V^3 \pi R^2 \lessapprox 0.2 \qquad (3)$$

(where P is the shaft power in watts), and then choose a suitable number of blades. Two or three usually

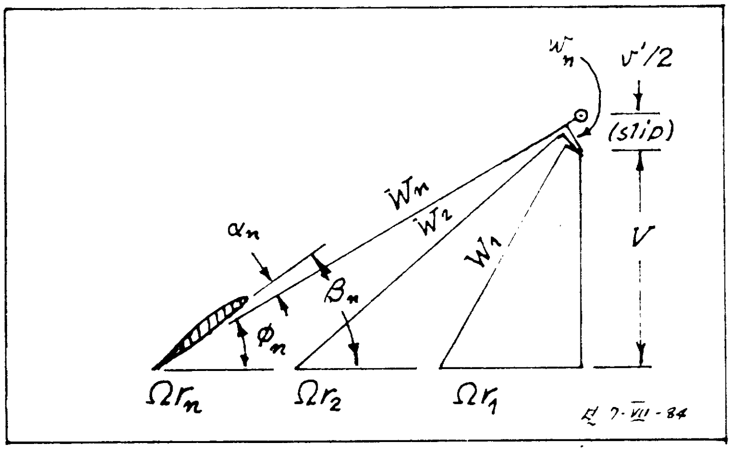

Fig. 2 Induced and resultant velocities for minimum induced loss. All the resultant velocities W_η, appear to focus on a common axial velocity $V + v'/2$; v' is the displacement velocity.

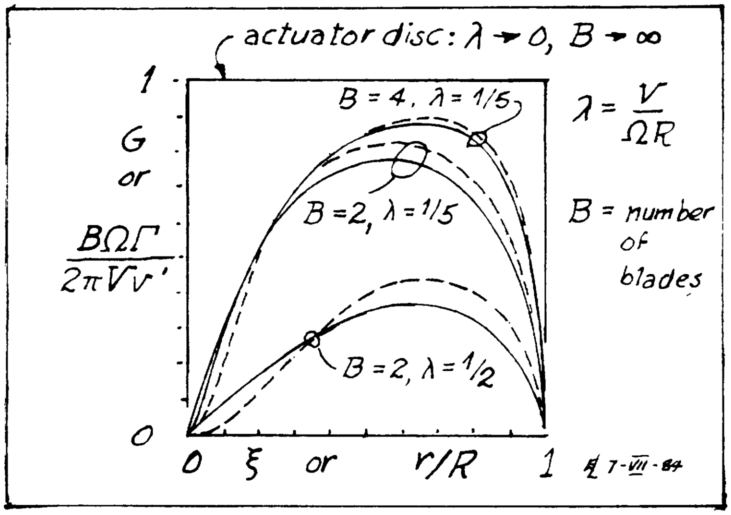

Fig. 3 Bound-Vorticity distributions for minimum induced loss, according to Betz and Prandtl - - -. According to Goldstein ———.

will be best. Next calculate the corresponding minimum-induced-loss bound-vorticity distribution, G. Also, it is necessary to have a radial variation of profile-drag/lift ratio, D/L, say 1/50, corresponding to a design lift coefficient of 0.50 and a profile-drag coefficient of 0.01. Then four simple integrals, suggested by Goldstein, can be evaluated numerically:

$$I_1 \equiv 4\int_0^1 G(1-\frac{D/L}{x})\,\xi\,d\xi \qquad (4)$$

$$I_2 \equiv 2\int_0^1 G(1-\frac{D/L}{x})(1/\ 1+x^2)\,\xi\,d\xi \qquad (5)$$

$$J_1 \equiv 4\int_0^1 G(1+\ D/L\ x)\quad d \qquad (6)$$

$$J_2 \equiv 2\int_0^1 G(1+\ D/L\ x)(x\quad 1+x\ )\ d \qquad (7)$$

where $\xi \equiv r/R$ and $x \equiv \Omega r/V = \xi/(V/\Omega R)$. With these integrals the displacement velocity ratio can be calculated:

$$\zeta = v'/V = \frac{J_1}{2J_2}\left[\sqrt{1+\frac{4P_c J_2}{J_1^2}}-1\right] \qquad (8)$$

and the overall efficiency:

$$\eta = (I_1\zeta - I_2\zeta^2)/P_c \qquad (9)$$

If the efficiency is satisfactory, the helix angle at any radius can be calculated,

$$\phi = \arctan \frac{(V/\Omega R)}{\xi}(1+\zeta/2) \qquad (10)$$

the blade angle (α_D is the design angle of attack),

$$\beta = \phi + \alpha_D \qquad (11)$$

the local velocity ratio,

$$\frac{W}{V} = \sqrt{x^2 + 1 - (\zeta\cos\phi/2)^2} \qquad (12)$$

and the local chord:

$$c/R = \frac{4\pi}{B}(V/\Omega R)\frac{G}{W/V}\cdot\frac{\zeta}{c_{\ell_D}} \qquad (13)$$

This preliminary blade geometry allows calculation of the radial variation of Reynolds number(2) to see if estimates for D/L, c_ℓ, and α_D have been reasonable and if the blade is structurally practical. Experience then shows how to change the design assumptions to improve the propeller. The theoretical basis for this analysis is more fully discussed in reference 4.

EXAMPLE: PROPELLER FOR A HUMAN-POWERED BOAT

A practical human-powered boat might have an overall length of 4.5 m (14.76 ft), a beam of 1.2 m (3.94 ft), and a keel draft of 75 mm (3 in) for a displacement of 120 kg (265 lb). A shaft power of 200 W (0.27 hp) should keep a canoe-like hull of these dimensions moving at about 3 m/s (5.83 knots). A propeller radius of 177.8 mm (7 in) leads to a power coefficient of:

$$P_c = \frac{2(200)}{(1000)(3)^3(\pi)(0.1778)}$$

$$= 0.149\ 170$$

which is most satisfactory. If one chooses two blades, a D/L of 0.02 over most of the radius, and lets the advance ratio be 0.25, the integrals are:

$$I_1 = 1.143\ 72 \qquad I_2 = 0.095\ 28$$

$$J_1 = 1.214\ 07 \qquad J_2 = 0.506\ 45$$

The displacement velocity ratio v'/V is 0.117 14, the efficiency is almost 90%, and the propeller looks like Figure 4 if all the blade elements operate at a design lift coefficient of 0.5. If the profiles are cambered to support this lift coefficient at zero angle of attack, the geometric pitch/diameter ratio is 0.831. The propeller must turn 645 rpm at this design point. A sketch is given for a suitable drive line; it is important that the propeller axis be nearly parallel to the flow since efficiency declines approximately as the cosine-cubed of the misalignment angle.

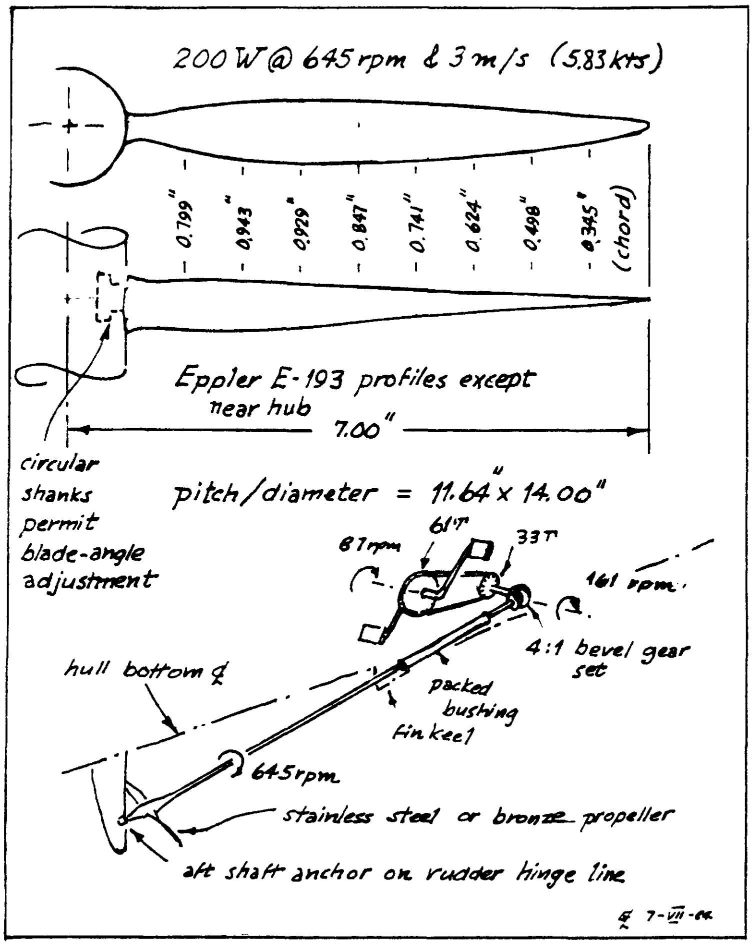

Fig. 4 M.I.L. propeller for human-powered boat.

REFERENCES

1. *Luftschrauben mit geringsten Energieverlust*, Albert Betz; with an appendix by Ludwig Prandtl. Reports of the Aerodynamics Research Institute at Goettingen, 1919. Also included, in nearly complete form, in NASA Reference Publication 1050, edited by R. T. Jones. NASA Reference Publication 1050 contains a reprint of NACA Technical Report #116, written by Prandtl in German about 1921, and published in English translation about 1923. This anonymous translation is one of the few good ones published by the old NACA.
2. *Theoretical Aerodynamics*, L. M. Milne-Thompson. Reprinted by Dover publications (no. 0-486-61980-X, 1973), NY.
3. *On the Vortex Theory of Screw Propellers*, Sidney Goldstein. Proceedings of the Royal Society, Series A, Vol. 123, London, 1929.
4. *Five Years Experience with Minimum Induced Loss Propellers* - Part I: Theory; Part II: Applications, E. Eugene Larrabee. SAE Preprints 840026 and 840027, 1984.*

E. Eugene Larrabee
Emeritus Professor,
Aeronautics and Astronautics
Massachusetts Inst. of Technology

* These two papers may be obtained, for US$6.00, from the SAE or from E. E. Larrabee, 12 S. Montgomery Ave., Apt. 1, Atlantic City, NJ 08401, USA.

HUMAN-POWERED BOATING: FOUR YEARS' EXPERIENCE

by Jon Knapp

My goal for the past four years has been to develop, promote, and market the ultimate human-powered boat. Our boat *Sea Saber* has several advantages over rowed boats. It has the rider facing forward with hands free for fishing, etc. It's also very fast and seaworthy.

The first two years were spent working with hydrofoils. My first boat, built in my fourth-floor apartment, was 4.3m (14 ft) long and weighed 16 kg (35 lb). It had one vertical slot at the center of bouyancy, similar to a daggerboard slot. I also built two hydrofoil wings of the inverted 'T'-type (totally submerged lifting surfaces.) A hydrofoil strut would slide into the vertical slot, thereby holding the hydrofoil at any angle of incidence and depth of submergence. To obviate the need for longitudinal stability and control, only 70 to 90 percent of the total boat weight would be lifted by the hydrofoil, with 10 to 30 percent remaining as hull displacement. The larger hydrofoil wing has a span of 1.3m (4.2 ft) and an area of 0.16 m^2 (0.75 sq ft). Each hydrofoil was hand-made without templates, having a wing section shape similar to NACA 4412 or Clark Y. The larger wing has enough roll resistance (due to the water's mass and viscous damping) to allow me to keep my balance without need for a stabilizing pontoon (after a little practice.) Although the big wing has more lift (it can lift the boat clear at 4.2 m/s (8 knots), momentarily) the smaller wing is faster than the big one. Unfortunately, having no hydrofoil at all is still faster than having a small one.

Our final hydrofoil experiment used a pair of small surface-piercing hydrofoils for roll balance only. Mounted at each end of the outrigger X-tube, each wing has a chord of 76mm (3 in.) and about 150 mm (about 6 in.) of surface penetration. Each wing is held 2.3m (7.5 ft) from the hull centerline by the X-tube. This is very nearly as fast as the hull with a pontoon (and no hydrofoil).

We now build slender hulls 6.4m (21 ft) long with a stabilizing pontoon. These boats have competed in many rowing races up and down the West Coast. They are generally the fastest boats in open water, bar none. In flat water, they have about the same speed as single rowing shells. We hope that our new "Larrabee" propeller will give us the edge.

Our propulsion system uses a 4-to-1 ratio gearbox. This turns a 460mm- (18-in.-)diameter propeller with a pitch of around 810mm (around 32 in.). I believe we were the first to use this combination which the experts now agree is ideal. My original propellers, cast in plastic, have a chord of about 51mm (about 2 in.) and are highly efficient. These props were used in setting several course records in open-water rowing races from 11 to 58 km (7 to 36 mi) long, and in the first IHPVA boat race at Long Beach. E. E. Larrabee suggested we use somewhat narrower blades (higher lift coefficients) and slightly modify the blade planform to squeak out the last few percent of efficiency (around 90%). We have these props cast in aluminum (Al-mag). Upcoming races should show if these new props have some advantage.

We use a long, hollow, stainless-steel driveshaft to transfer rotation from the gearbox to the propeller mounted under the rudder. We mount a stainless-steel U-joint on the shaft where the shaft exits the hull. This allows us to straighten the inclined driveshaft at the propeller end, reducing vibration and increasing efficiency. There's evidence that prop efficiency falls off with shaft inclination approximately as the square of the cosine of the angle of inclination. We've reduced our angle of inclination from 14 deg (as seen at the first HP boat race) to about 7 deg. A further reduction seems to cause hull hobby-horsing because the propeller-thrust line is too far below boat's center of gravity and center of drag.

We are now marketing Sea Saber on the open market. I think that there's a bright future for HPBs. The advantages of speed, visibility, seaworthiness, and versatility have been proven. Not only good at the race course, these boats are practical water vehicles for fishing, transportation, exercise, and relaxation.

For those interested in building or converting their own boats, all Sea Saber *propulsion components are now for sale. We have props suitable for racers and cruisers with up to three riders. Send US$2.00 for all Sea Saber info or an SASE for free parts list.*

Jon Knapp
Saber Craft
1501 W. Dry Creek Rd
Healdsburg, CA 95448

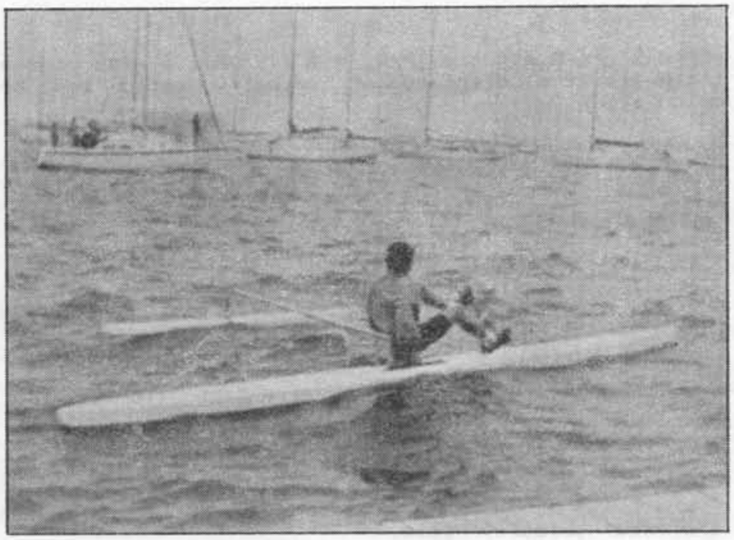

A little choppy at Newport.

TECHNICAL ADDENDUM

I'd like to pass on a formula for drag calculation of submerged hydrofoils that I found in a 1952 NACA (pre-NASA) report, NACA Technical Report #1232. The drag of a wing in free space is normally considered the sum of friction drag (section drag, Cd) plus the induced drag due to lift-loss around the wingtips. For a hydrofoil the induced-drag component is increased by the influence of the water surface.

$$C_{D_{TOTAL}} \equiv C_D + C_L \left[\frac{(1+\delta)}{AR} + \frac{Kc(1+\delta)}{8\pi} + \frac{gc}{2V^2} e^{\left(\frac{-2gd}{V^2}\right)} \right]$$

where $C_{D_{TOTAL}} \equiv$ total drag coefficient for hydrofoil

$C_L \equiv$ Lift coefficient

$(1+\delta)$ is a correction factor for wings of a non-elliptic planform, and is generally less than 1.05.

$AR \equiv$ Aspect Ratio, defined as wingspan squared divided by the wing area.

$C \equiv$ wing chord

$$K \equiv \frac{2s}{s^2+4d^2} \; \frac{c}{2\sqrt{s^2+4d^2+(c/2)^2}}$$

where $s \equiv$ semispan

$g \equiv$ gravitational acceleration, 32.2 feet/second

$v \equiv$ velocity of wing, feet/second

$e \equiv$ 2.7182 (natural-log base)

Surface-piercing foil experiment.

d $\equiv$ depth of wing submergence

C_D $\equiv$ "section" drag as given for two-dimensional wings in the usual airfoil data.

The first term in the brackets is the usual "induced drag" due to lift for wings in free space. The second term is the induced drag from trailing vortices due to the proximity of the water-air surface. The third term is the induced drag due to waves formed on the water's surface. Note that these three components all increase with the square of the lift coefficient (C_L^2). I suspect this formula underestimates the actual drag, because my boat wasn't as fast as calculated. Perhaps someone else can update the formula and/or make a better hydrofoil than mine to make a good HP hydrofoil boat a reality.

(Ed. Note: Alec Brooks and Allan Abbott have learned from your pioneering efforts - Dave Wilson.)

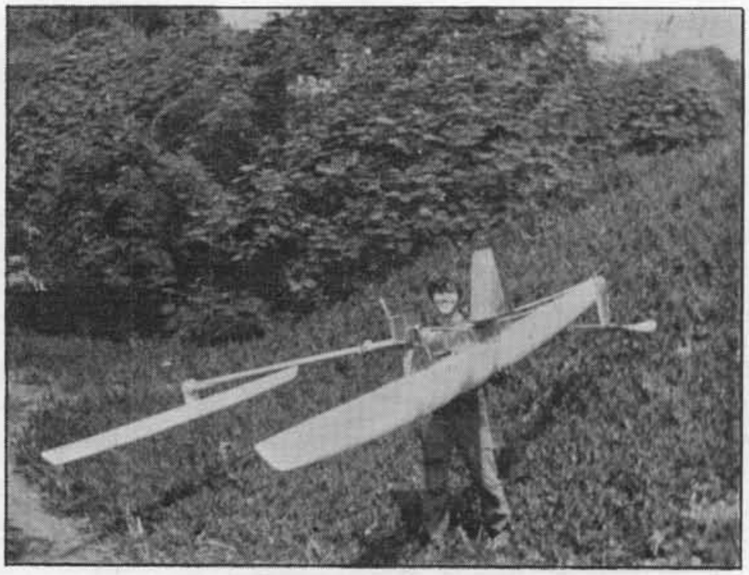

First boat with smaller wing (hard to see.)

Some rowing and sculling records are quoted by Alec Brooks:

2000m single 4.89 m/s, 10.94 mph
2000m eight 6.03 m/s, 13.5 mph.

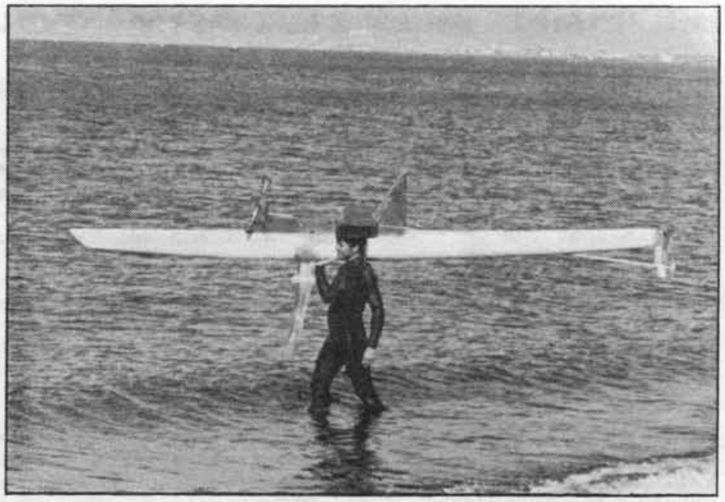

First boat, with larger wing and no pontoon.

Second prototype cruising San Francisco Bay. No hydrofoils.

HUMAN AUXILIARY POWER IN A TRANSATLANTIC SAILING RACE

by David Gordon Wilson

This is a tribute to two friends. One is Bill Doelger, who wrote to me on May 31,1979, to ask for help in his attempt in the 1980 OSTAR - the Observer Single-handed TransAtlantic Sailing Race. This gruelling race for unlimited sailboats has been held every four years for the past two decades or so from Plymouth, UK to Newport, RI. Having only one person aboard means that either the contestants must heave to when they sleep, or must use automatic-steering devices, which had been developed by that time to be pretty sophisticated. But OSTAR rules limit battery storage to 60 Ah, not enough to operate the steering gear and navigation lights and devices for a voyage which can last for two months. Electricity can be generated by wind or water flow, both causing additional drag, or by solar panels. Bill had all the solar panels he could afford on his Newick-designed Val trimaran, and they weren't enough. Bill wrote:

"Almost more important to me than generating electricity is exercise and, in the North Atlantic especially, keeping warm. I am looking for pedal power permanently rigged in the cockpit, open to the weather and allowing me to steer the boat as I push the generator. Another person I know had an unsuc-

Cont. on Page 14

HUMAN AUXILIARY POWER IN A SAILING RACE

Continued from Page 13

cessful pedal-power rig, which tired him out too fast, forcing him to give up on it. I am trying to imagine something I can comfortably sit in to pedal two hours a day in fifteen-minute intervals. Another requirement is that the unit should be light and not take up too much space...."

I instantly referred Bill to Steve Loutrel, a superb sailor and designer who every year used to take his wife and hardy students to northern Labrador or into Hudson's Bay among the ice-floes in a small sloop, and who had designed a pedalled generator. But even he had not succeeded in producing a device that did what Bill Doelger wanted.

Bill collected me one blustery day in June, drove me to Marblehead, and took me for a sail in Edith, his Val. It was thrilling. I had just purchased a second-hand Tornado, a fast Olympic-class cat, and wanted to learn all I could. (Alas, others felt that they had more right to my Tornado than I, and stripped it in the boatyard before I had my first sail. I took up sail-boarding as an interim solution before I could have my dream of a fast HPB.) A trimaran has, of course, three hulls (or, if you are fussy, a hull and two *amas*), and in one of 10m overall length the main hull has a small cabin and cockpit. But there was hardly room to stand or sit, let alone pedal and steer simultaneously.

I added "the design and construction of a sailboat pedal-powered generator" to my list of undergraduate projects at MIT, and this was noticed by Carl Nowiszewski, a tall, muscular, friendly, capable mechanical-engineering senior. He also had great tact and perseverance, and, with Bill and me, went through many iterations before arriving at a folded-back semi-recumbent two-stage design that would just fit at an angle in Bill's cramped cockpit. I hope that I can include some illustrations.

Bill had told me he was not a practical type, but he contributed greatly to the final design. He was thrilled with it. He sailed over to Britain just in time for the race, and crossed the start line among the last of the contestants. When 160km out, a "hefty ocean-going chase boat" with press photographers circled him "as I pedal on my generator and act photogenic." "I discovered that the solar panel I had simply did not provide enough power for my self-steering and instruments. The (pedal) generator worked both ways across the Atlantic. It kept my battery up and kept me warm and healthy in addition to occupying me from one to two hours every day." But all did not go well when he encountered some of the Atlantic's storms when nearly across.

"Seeing a near-vertical wall of water the height of a two-story building moving down on me at 40 mph may be exciting, but I am not interested....It is difficult to be objective about bad waves unless one actually capsizes, but I cannot help think that I came close to going over." Then, south of Newfoundland, "in the very early morning of the 27th (of June, 1980), I am doing well. For the first time in several days, I am making my charted course and doing a comfortable 7 knots (3.6 m/s) under a moonlit sky and 10 knots (5.2 m/s) of wind. Then a big "BANG". I look all over the boat, but I can see nothing wrong. I sit back on my generator and begin pedalling, reasoning uncertainly that I must have hit something. At 0326, another bang, and like a big tree the mast falls down easily onto the starboard *ama*."

The story of how Bill Doelger, still single-handed, got the huge broken mast stepped two days later and sailed into Newport as number 31 out of 88 starters, 16th in his class, is a saga that, unfortunately, does not belong here, but it totally disproves Bill's claim that he is an impractical type. His was a personal triumph. He also participated in a wider triumph: that of multihulls in a race previously dominated by monohulls. The race was, in fact, won by a 67-year-old Massachusetts publisher, Phil Weld, in another Dick Newick trimaran, at a time when younger folk were trying to make those of us over 30 feel we should be unseen and unheard. So there was a third triumph, of a very young sexagenarian. And a fourth triumph has been very little celebrated until now: Carl Nowiszewski's pedalled generator. My aim has been to give Carl some of the credit he deserves.

Dave Wilson
15 Kennedy Rd
Cambridge, MA 02138

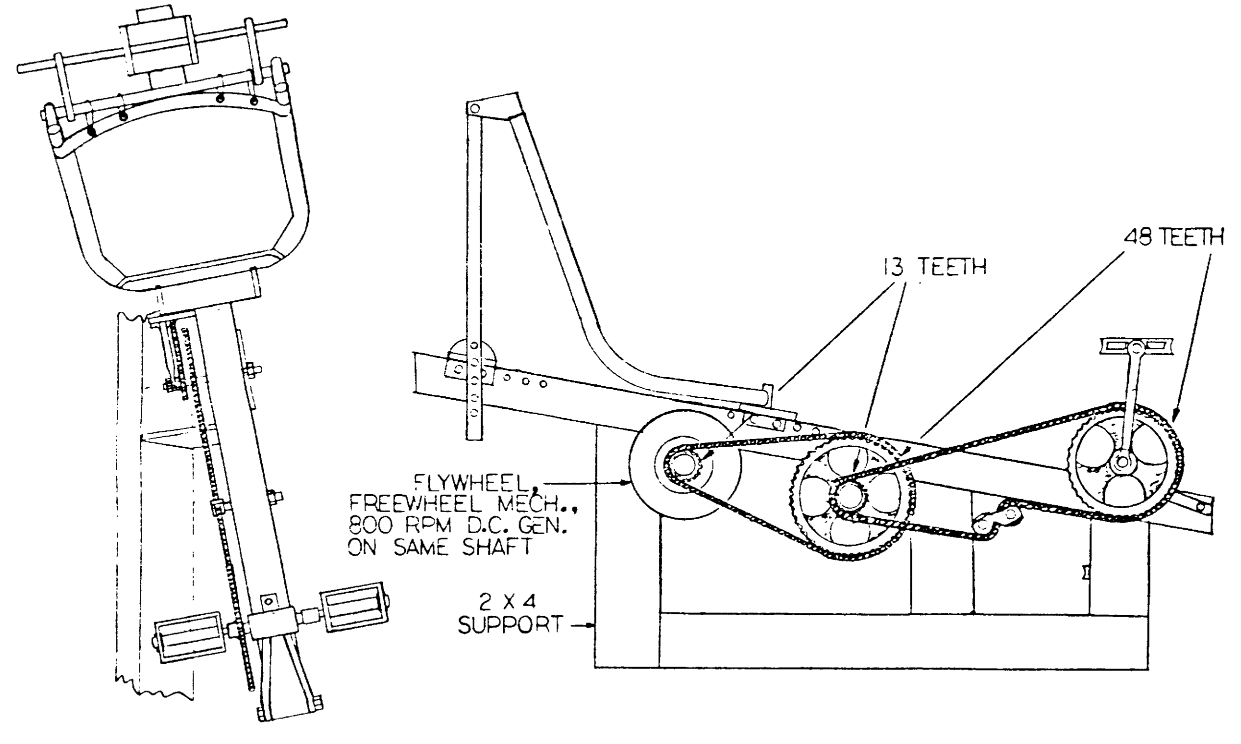

CARL NOWISZEWSKI'S PEDALLED GENERATOR FOR A SAILBOAT COCKPIT

THE WATER STRIDER HPBs

by Richard Ott

The next sport introduced to the International Olympics should be pedal-powered water racing! This is one of the goals of the Hydra-Products Company, manufacturers of the *Water Strider*, a propeller-driven pedal boat. We feel that the best way to promote this goal is to encourage and help people in the construction of pedal-powered boats, such as Jon Knapp's *Saber Craft* and Yvon Le Caer's *Aqua Cycle*.

We have been inventing and designing pedal-powered equipment, for use around the home as well as on the water, for over ten years. Some of the trade names of these inventions are: the Mechanical Mule, the Energy Cycle, and the Water Strider pedal boat.

The *Mechanical Mule* is a two-person system for small farms or home gardens, which can cultivate, plow, harrow, make rows, etc., by pedalling a cable winch-type unit which pulls a remote tool-carrying unit.

The *Energy Cycle* is a one-person pedalling center for producing power around the home for such tasks as grinding grain, producing electricity, and even such things as turning a potter's wheel or making ice cream.

The *Water Strider* is a unique, high-ratio, gear-driven propeller pedal boat, providing speed, stability, and ease of handling for all types of pedalling enthusiasts. Basically, we build three *Water Striders* - a one-person boat, a two-person boat, or a four-person boat, having all persons pedalling.

The 3.6m (twelve-foot) or 4.9m (sixteen-foot) fiberglass hulls have positive flotation, with a non-skid fiberglass deck which makes an excellent fishing platform or provides plenty of storage space for equipment. The seats are adjustable to an individual's leg length. All the hardware is stainless steel or aluminum, for use in fresh or salt water. The average pedal speed of the boat is 2.5 m/s (five to six miles per hour) with capabilities to 4.5 m/s (ten mph) for the serious pedaller.

The design of the hull enables the boat to be pedalled against the currents and wind, something which cannot be done by a conventional paddle-wheel boat.

In our design and development program, we have attempted to develop a versatile boat to fit all ages, all athletic abilities, and even certain physical handicaps. We have also tried to develop a boat that is as maintenance-free as possible, and can be repaired easily by utilizing local supplies and local mechanical expertise.

We have done a great deal of research on body position, comfort, efficiency, and utility. For example, on multi-purpose pedal boats, it does not make sense to have a bicycle upright-mounted position. Therefore we have designed a semi-recumbent sitting position which allows easy movement of the body and frees hands for such tasks as fishing or taking photographs.

One of the other criteria in our design and development program was ease of mobility. It is very important to be able to transport human-powered boats from one body of water to another. Our single pedal boat weighs 23 kg (fifty pounds) and the double weighs 57 kg (125 pounds), which means that a two-member team can easily car-top our pedal boat.

We are also willing to build and design custom boat and drive units for special needs, such as the Saber Craft and the Aqua Cycle. We have built boats with conventional cycling seating positions for the serious cyclist who wants to train in the relatively safe environment provided by lakes and rivers, as compared to busy city streets and highways.

Our manufacturing facility is located fifty miles north of Philadelphia. Call us at (215) 262-8967 to chat about the possibilities of pedalling on the water. Let's make that Olympic dream of pedal-powered water racing really come true!

Richard Ott
Hydra-Products Company
R.D. 4, Box 85
Northampton, PA 18067

Hydra-Products' pedal-powered, propeller-driven Water Strider I.

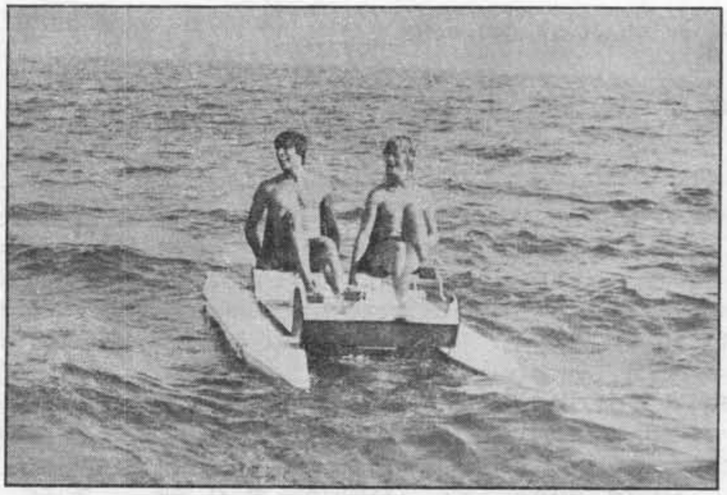

Cross-current and counter-wind pedalling is possible with the Water Strider. *(Shown is the* Water Strider II.*)*

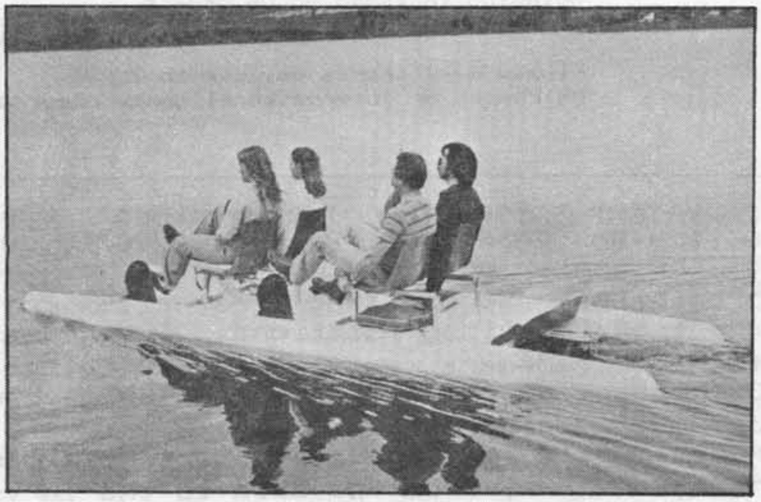

Four people can pedal in comfortable, efficient, semi-recumbent position on the Water Strider IV.

IHPVA MEMBERSHIP AND ORDER FORM

TO: IHPVA Dept MO
PO Box 2068
SEAL BEACH, CA 90740

Date:________________

SHIP TO:
Name:_____________________ ________________________________
Address:__________________ ________________________________
City/State________________ __________________________Zip___________
If address change, please include your old mailing label

QTY	ITEM CODE	DESCRIPTION (TITLE, HARD/SOFT, COLOR, SIZE)	COST EACH	TOTAL US $
		BOOKS		
	M1S	Bicycling Science (Soft)	8.95	
	M1H	Bicycling Science (Hard)	20.00	
	M2	Bicycles and Tricycles (Soft)	8.95	
	B1	HPV Fairing Construction Techniques	20.00	
	B2	Evolution of an HPV Project	15.00	
	S1	Proceedings of 1st Scientific Symposium	23.00	
	S2	Proceedings of 2nd Scientific Symposium	23.00	
		REPRINTS (GOOD QUALITY XEROXES)		
	H01	HUMAN POWER. NO 1, Winter 1977, 1978	2.50	
	H02	HUMAN POWER. NO 2, Winter 1978	2.50	
	H03	HUMAN POWER. NO 3, Summer 1979	2.50	
	H04	HUMAN POWER. NO 4, Spring 1980	2.50	
	H05	HUMAN POWER. NO 5, Winter 1981	2.50	
	H06	HUMAN POWER. NO 6, Fall 1981	2.50	
	H07	HUMAN POWER. VOL 2, NO 1, Spring 1982	2.50	
	H08	HUMAN POWER. VOL 2, NO 2, Spring 1983	2.50	
	R01	NEW UNIFIED PERFORMANCE GRAPHS AND COMPARISONS FOR STREAMLINED HPV'S, D Malewicki	3.50	
	R02	THE AERODYNAMICS OF HUMAN-POWERED LAND VEHICLES. Scientific American, Vol 249, No 9	2.00	
	R03	Bike Tech, VOL 2, NO 1, February 1983 SPECIAL HUMAN POWERED VEHICLE SECTION	2.25	
		IHPVSC SOUVENIRS		
	T07	1981 T-Shirt. Blue, L Blue, Gold, Black, Burgundy	5.00	
	T08	1982 T-Shirt. Med Yellow, Med & XL Beige	5.00	
	T09	1983 T-Shirt. Gray, with IHPVA logo	5.00	
	P08	8th IHPVSC Poster. California 1982	3.00	
	P09	9th IHPVSC Poster. Indianapolis 1983	3.00	
	X08	8th IHPVSC Program. California 1982	1.50	
	X09	9th IHPVSC Program. Indianapolis 1983	1.50	
	C09	1984 Human-Powered Vehicle Calendar	1.50	

IHPVA MEMBERSHIP

One Year: US 15.00, Canada/Mexico 17.00, Elsewhere 20.00 ____________

TOTAL MDSE_______

Shipping included on US orders.
Foreign orders: AIRMAIL $7/book, $3/Reprint or Souvenir SHIPPING_________

Please make checks payable to IHPVA TOTAL DUE________
US checks or International Money order ONLY

Second- and first-class postage paid at Huntington Beach, CA and additional mailing locations. Cover design and title protected by U.S. and foreign trademark registrations. Editor: David Gordon Wilson, 15 Kennedy Drive, Cambridge, MA 02138. Subscription/membership information: Dues are US$15 per calender year for US mailing addresses. Addresses outside the USA, please remit: US$17 for Canada and Mexico; all other countries US$20. Please make your check or money order payable to the IHPVA. Send dues to: IHPVA, P O Box 2068, Seal Beach, CA 90740 USA.